HSK-A 63 SFH20 100 2.5G 25000 SL

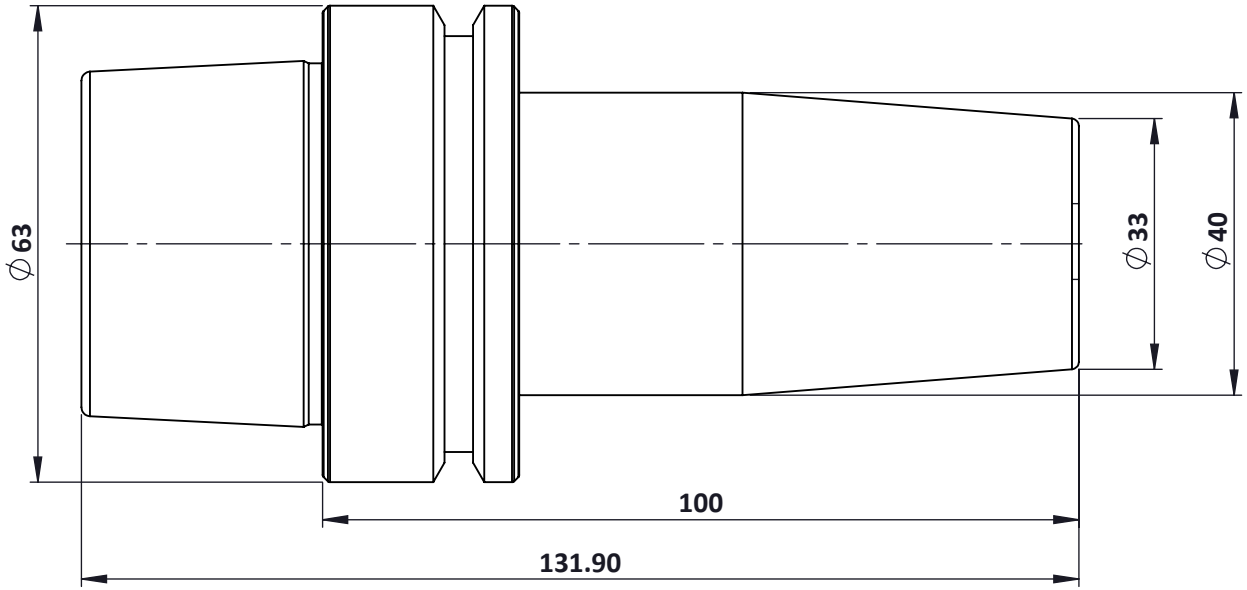

A4

MATERIAL:

WEIGHT:

SHEET 1 OF 1