ALGRA
ymt TECHNOLOGIES
www.ymttooling.co.uk
01935 428375
tooling@ymtltd.co.uk

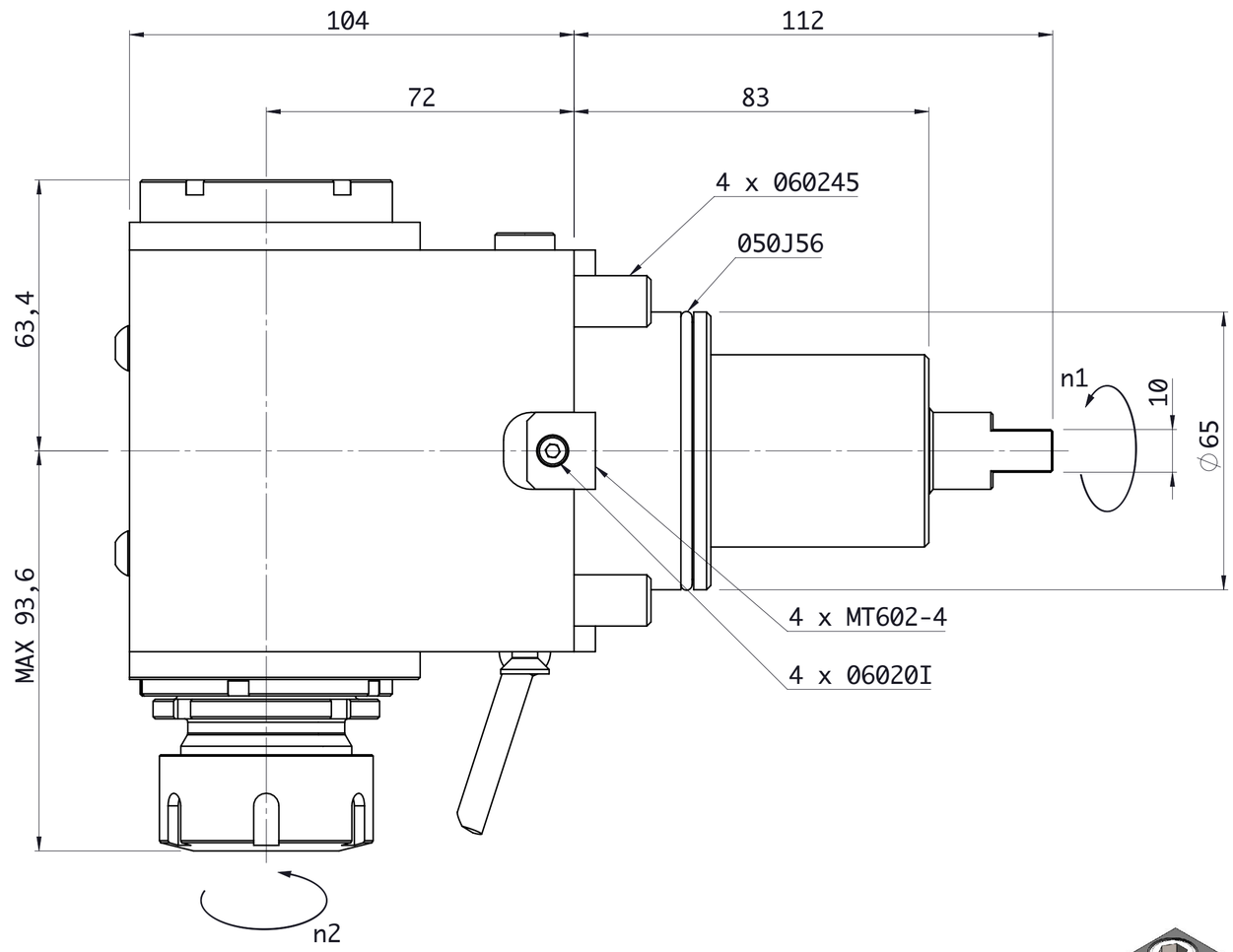

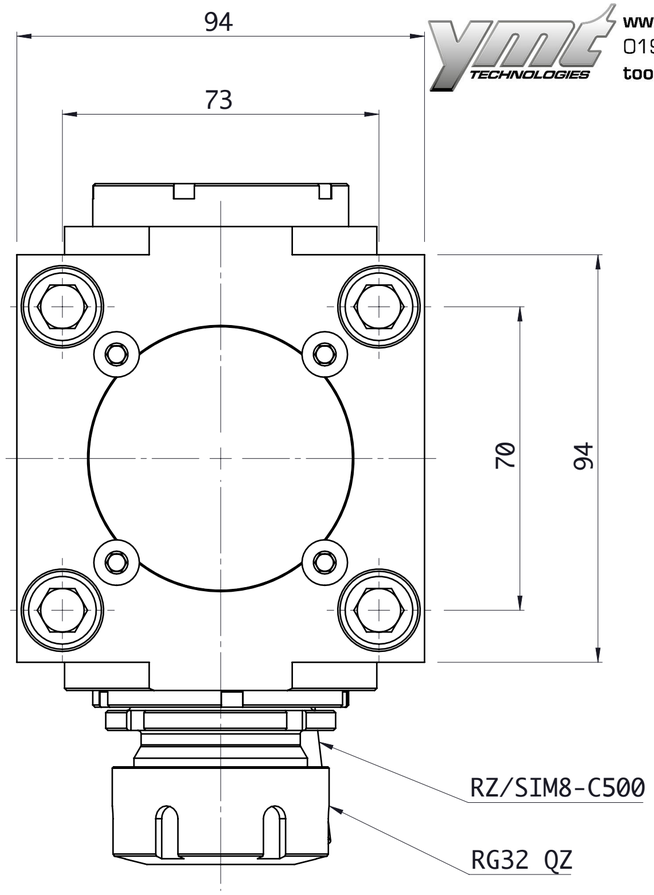

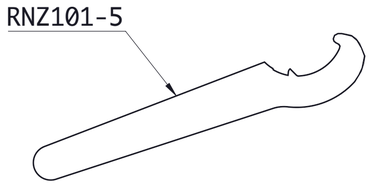

Commercial Code: RRPPS 32 131UT65		
Denomination: Driven tool 90° Internal/External coolant		Cad Code: AMT601-A
Speed RPM Max 6.000	Max Power 10 kw	Info: ALGRA S.p.A.
Ratio n1 : n2 -1 (1 : 1)	T2. Max 70 Nm	Via Manzoni 41, I-24031 Almenno S.Salvatore (BG)
Pressure Max 80 bar	Filtration 30µm	Tel. +39 035642051 Fax +39 035640128
Weight (Kg) 7.7	Output DIN6499 - ER32	algra.accessori@algra.it

QUESTO DISEGNO E TUTTE LE INFORMAZIONI CONTENUTE SONO DI NOSTRA PROPRIETA'. NON PUO' ESSERE DIVULGATO O COPIATO SENZA NOSTRA AUTORIZZAZIONE SCRITTA E DEVE ESSERE RESO SE RICHIESTO
THIS DRAWING AND ALL INFORMATION THEREON IS OUR PROPERTY AND MAY BE CONFIDENTAL. IT MUST NOT BE MADE PUBLIC OR COPIED UNLESS AUTHORIZED BY US AND IS SUBJECT TO RETURN UPON REQUEST
DIESE ZEICHNUNG IST UNSER EIGENTUM UND DARF OHNE UNSERE GENEHMIGUNG WEDER VERVIELFÄLTIGT NOCH DRITTEN PERSONEN, INSBESONDERE KONKURRENZFIRMEN AUSGEHÄNDIGT ODER MITGETEILT WERDEN